KDOT TYPE 22 CURB INLET

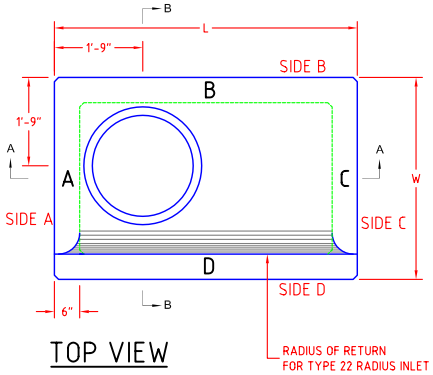

TOP VIEW

PRECAST TOP NOTES:
- 1-1/2" COVER ON ALL REINFORCING
- CASTING TO MEET KDOT STANDARD

STEP NOTES:
- if (H) is less than 6' tall - NO STEPS REQUIRED
- if (H) is greater than 6' - 4 STEPS REQUIRED
- add 1 STEP for each 12" above 6'.

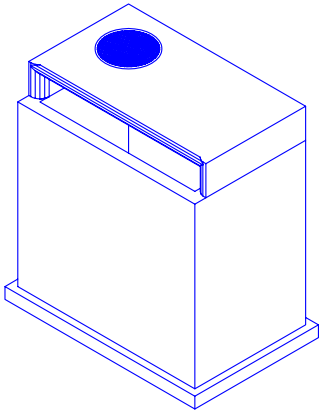

-REINFORCING REBAR TO MATCH KDOT STANDARD TYPE 22 PRECAST INLET. RD752 SI.

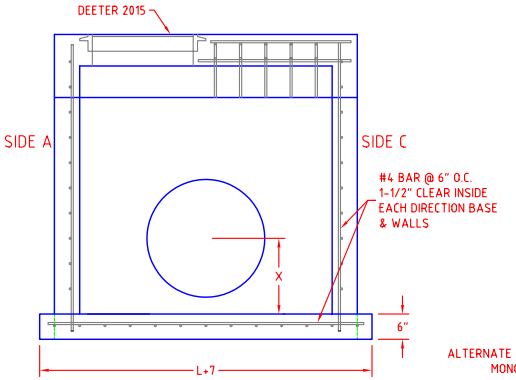

SECTION "A-A"

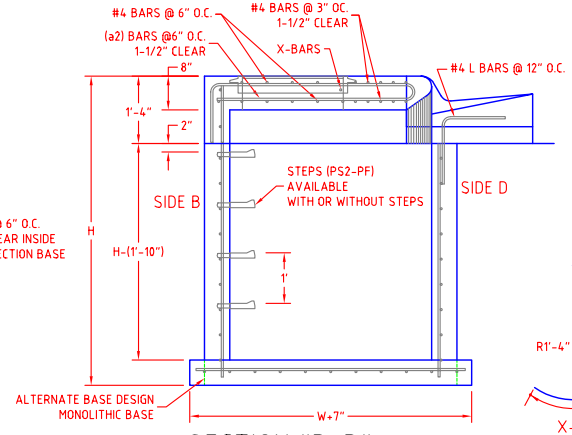

SECTION "B-B"

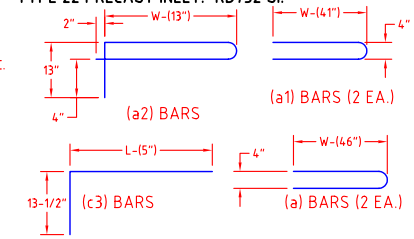

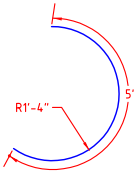

X-BAR