# KDOT TYPE "B" SPECIAL CURB INLET

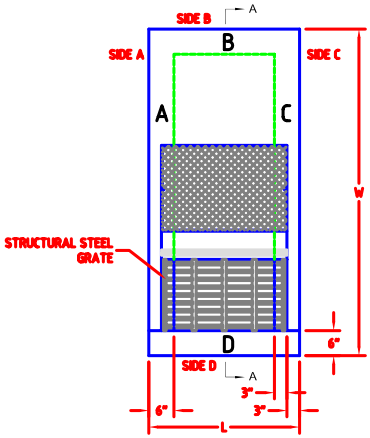


TOP VIEW

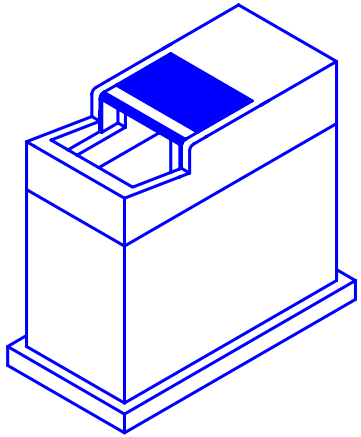

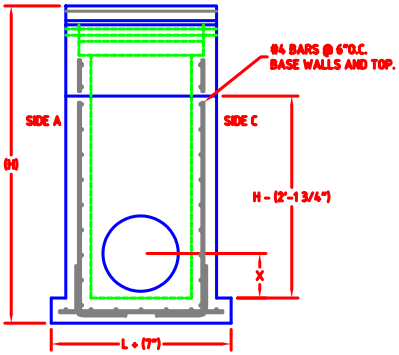


FRONT VIEW

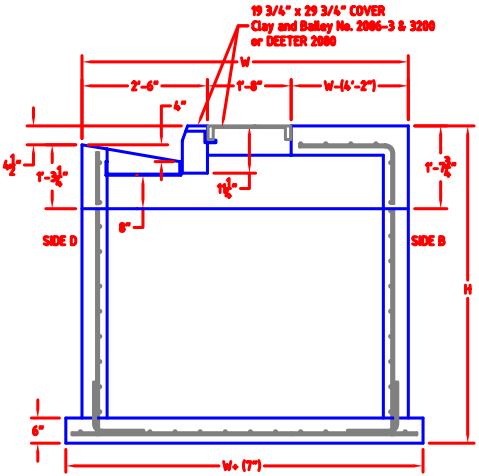


SECTION "A - A"